SAATI Composites

suter-kunststoffe ag
swiss-composite.ch
CH-3312 Fraubrunnen 031 763 60 60 Fax 763 60 61

TEXINDUSTRIA® Multiaxial Data Sheet

EBX 800

E-Glass 100% biaxial 800 g/sqm.

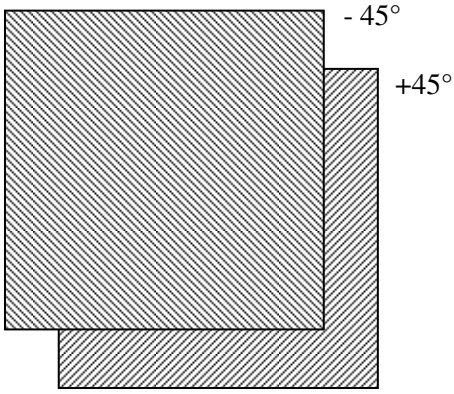

Total Weight	800 g/sqm (±5%)
Standard Width	1270 mm
Dry Thickness	0,70 mm (±15%)

Angle of axis	Weight g/sqm	Fibre type	Sizing compatibility
- 45°	400	600 tex E-Glass	Vinylester/Polyester/Epoxy
+ 45°	400	600 tex E-Glass	Vinylester/Polyester/Epoxy

These informations are properties of Saati S.p.A. and correspond to the present knowledge and are without any legal binding. The values of the cured properties may change due to processing conditions. Modifications due to technical progress or commercial policy change are possible.